intreXis®

Power Supplies with the X

Datasheet

intreXis Boardnet Converter Platform
IC27X, 50 – 60 W Single-Output
24 Vin – 110 Vin

- Xtra wide input voltage range: 14.4 – 154 VDC
- Xtra high efficiency: 91.9 % @ 110 Vin, 50 W
- Xtra wide temperature range: -50 – 85 °C
- Xtra small and light: 98 g (open frame)
- Xtra flat: 21 mm total mounting height (open frame)

This datasheet covers the details of the IC27X power supplies with single output voltage and output power of 50 W. In addition, the IC273_X can deliver 60 W over the input voltage range 72 – 110 V.
These DC/DC converters are designed according to EN 50155:2017 and IEC 60571:2012 for railway applications and are ideal for other demanding environments which require the highest performance and reliability.

Output voltages: 12 V, 15 V, 24 V. Other voltages on request.
Ordering codes:
IC271_2, IC272_2, IC273_2 (open frame, with push-in connectors);
IC271_3, IC272_3, IC273_3 (standard chassis mount, with terminal block headers).
IC271_6, IC272_6, IC273_6 (open frame, with terminal block headers).

The differences between the variants are explained in this datasheet.

Vitec POWER GmbH
Bahnstraße 65-67/2/2, 2230 Gänserndorf, AUSTRIA
Tel.: +43 (0) 2282 3144, E-Mail: office@vitecpower.com

INPUT CHARACTERISTICS

Continuous Input Voltage Range	16.8 – 154 VDC			
Temporary Input Voltage Range according to EN 50155:2017, 5.1.1.3	14.4 – 154 VDC for 1.0 sec			
Input Undervoltage Lockout	Vin_OFF = 13.2 VDC ±2 % Vin_ON = 15.5 VDC ±2 %.			
Input Voltage Reverse Polarity Protection	Active reverse polarity protection: Iin_reverse < 500 µA @ Vin = -154 VDC (with reverse polarity of Vin, the converter remains off without being damaged. Only a small reverse current Iin_reverse flows. With correct polarity of Vin, the converter works correctly)			
Inrush Current over the entire operating temperature range	An active inrush limitation circuit limits the input inrush current after turn-on of the input voltage. The charging current into EMI suppression capacitors is disregarded during the first microseconds after switch-on. Inrush Current Energy over the entire input voltage range: I_{inrush}^2t <0.6 A^2s @ Vin=16.8 – 137.5 VDC Inrush Current Peak = 2.4 A typ. @ 24 Vin Inrush Current Peak = 11 A typ. @ 110 Vin			
Input Capacitance	190 µF			
Input Current typ. @ full Load (50 W)	**24 Vin**	**36 Vin**	**72 Vin**	**110 Vin**
	2.3 A	1.5 A	0.75 A	0.49 A
Input Current typ. @ 60 W (IC273_X only)	**24 Vin**	**36 Vin**	**72 Vin**	**110 Vin**
	2.7 A	1.8 A	0.90 A	0.59 A
Input Power typ. @ no Load over the input voltage range	**IC271_X**	**IC272_X**	**IC273_X**	
	0.38 – 0.52 W	0.41 – 0.56 W	0.50 – 0.67 W	
Internal Input Fuse	Fuse included, therefore no external fuse or circuit breaker required. If you, nevertheless, install an external circuit breaker for any other reason, please select it according to the recommendation below. I^2t-fuse = 97.5 A^2s			
External Circuit Breaker recommendation Important: Circuit Breaker must be rated for the maximum DC-input voltage	**24 Vin**	**36 Vin**	**72 Vin**	**110 Vin**
	5 A, type B	3 A, type B	2 A, type B	2 A, type B
Interruptions of Input Voltage Supply (Hold-up time)	Class S2 (10 ms) according to EN50155:2017 The converter continues to operate as intended during and after the interruption, with no degradation of performance or loss of function over the entire input voltage range (Performance criterion A).			
Startup time (Time input voltage ON to output voltage ON)	< 200 ms for all input voltages			

Vitec POWER GmbH
Bahnstraße 65-67/2/2, 2230 Gänserndorf, AUSTRIA
Tel.: +43 (0) 2282 3144, E-Mail: office@vitecpower.com

OUTPUT CHARACTERISTICS

Output Voltage Nominal	**IC271_X**	**IC272_X**	**IC273_X**
	+12.0 VDC	+15.0 VDC	+24.0 VDC
Max. Continuous Output Power @ Vin = 16.8–154 V, 14.4–154 V for 1.0 sec (no derating over the entire temperature range)	50 W		
Max. Continuous Output Power @ Vin = 50.4–154 V, 43.2–154 V for 1.0 sec (no derating over the entire temperature range)	Only IC273_X: 60 W		
Minimum Load	No minimum load required.		
Setpoint Accuracy	< 1.0 %		
Load Regulation @ off-load to full load over the entire temperature range	**IC271_X**	**IC272_X**	**IC273_X**
	< 0.4 %	< 0.4 %	< 0.2 %
Line Regulation @ full load over the entire temperature range	< 0.1 %		
Output Ripple & Noise @ 20 MHz bandwidth, including spikes	< 50 mVpp @ 25 °C < 100 mVpp @ -50 – +85 °C		
Overload and Short-Circuit	The converter is continuous overload and short-circuit proof. **Output overloaded:** The output voltage is reduced and the output current limited (constant current). **Output short-circuited:** The converter goes into Hiccup-Mode: The converter switches off and tries periodically to switch on again. If the short-circuit is still present, the converter switches off again and tries again periodically. If the short-circuit is removed, the converter switches on at the next switch-on attempt.		
Current Limit (varies due to component tolerances)	**IC271_X**	**IC272_X**	**IC273_X**
	4.35 – 5.21 A	3.50 – 4.17 A	2.19 – 2.65 A @ Vin = 24–48 V
			2.63 – 3.13 A @ Vin = 72–110 V
Short-Circuit current	< 4.0 Arms	< 3.0 Arms	< 2.0 Arms
Overvoltage Protection (OVP) (output voltage is limited, if main regulation loop fails)	<16 VDC	<20 VDC	<31 VDC
	SELV-compliant according to EN 60950-1:2006+A2:2013, IEC 60950-1:2005+A1:2009+A2:2013 CSV		
Paralleling of Outputs	Paralleling can be optionally included. Please contact intreXis for advice		
Internal Decoupling Diode	Decoupling diode on the output can be optionally included. Please contact intreXis for advice		
Maximum load-capacitance	5000µF		

Vitec POWER GmbH
Bahnstraße 65-67/2/2, 2230 Gänserndorf, AUSTRIA
Tel.: +43 (0) 2282 3144, E-Mail: office@vitecpower.com

EFFICIENCY

IC271_X:

Conditions	**24 Vin**	**36 Vin**	**72 Vin**	**110 Vin**
Efficiency typ. @ 100 % Load	91.6 %	92.9 %	92.8 %	91.9 %
Efficiency typ. @ 66 % Load	92.7 %	92.9 %	92.9 %	91.5 %
Efficiency typ. @ 33 % Load	91.9 %	91.5 %	91.0 %	90.5 %

IC272_X:

Conditions	**24 Vin**	**36 Vin**	**72 Vin**	**110 Vin**
Efficiency typ. @ 100 % Load	91.3 %	92.8 %	92.7 %	91.8 %
Efficiency typ. @ 66 % Load	92.5 %	92.7 %	92.9 %	91.3 %
Efficiency typ. @ 33 % Load	91.8 %	91.3 %	90.3 %	90.0 %

IC273_X:

Conditions	**24 Vin**	**36 Vin**	**72 Vin**	**110 Vin**
Efficiency typ. @ 100 % Load	91.4 %	92.8 %	92.6 %	91.7 %
Efficiency typ. @ 66 % Load	92.4 %	92.5 %	92.9 %	90.2 %
Efficiency typ. @ 33 % Load	91.4 %	91.0 %	88.8 %	88.5 %

SIGNALS AND INTERFACES

LED	Green LED on output side indicates that output voltage is ok

Vitec POWER GmbH
Bahnstraße 65-67/2/2, 2230 Gänserndorf, AUSTRIA
Tel.: +43 (0) 2282 3144, E-Mail: office@vitecpower.com

ELECTROMAGNETIC COMPATIBILITY (EMC)

Test	Standard	Test severity levels	Performance Criteria
Surges	EN 50155:2017 EN 50121-3-2:2016/ A1:2019 IEC60571:2012 IEC 62236-3-2:2018	1.2/50 µs 42 Ω, 0.5 µF DC power supply port ±2 kV line to ground ±1 kV line to line	Criterion B required, but compliant with more strict criterion A
Electrostatic discharge	EN 50155:2017 EN 50121-3-2:2016/ A1:2019 IEC60571:2012 IEC 62236-3-2:2018	±6 kV contact discharge ±8 kV air discharge	Criterion B required, but compliant with more strict criterion A
Fast transients	EN 50155:2017 EN 50121-3-2:2016/ A1:2019 IEC60571:2012 IEC 62236-3-2:2018	±2 kV 5/50 ns tr/th 5 kHz repetition frequency	Criterion A
Radio-frequency common mode	EN 50155:2017 EN 50121-3-2:2016/ A1:2019 IEC60571:2012 IEC 62236-3-2:2018	150 kHz – 80 MHz 10 Vrms (carrier voltage) 80 % AM, 1 kHz Source impedance 150 Ω	Criterion A
Radio-frequency electromagnetic field	EN 50155:2017 EN 50121-3-2:2016/ A1:2019 IEC60571:2012 IEC 62236-3-2:2018	80 MHz – 1000 MHz 20 Vrms/m 80 % AM, 1 kHz unmodulated carrier; 1400 MHz – 2000 MHz 10Vrms/m 80 % AM, 1 kHz unmodulated carrier; 2000 MHz – 2700 MHz 5 Vrms/m 80 % AM, 1 kHz unmodulated carrier; 5100 MHz – 6000 MHz 3 Vrms/m 80 % AM, 1 kHz unmodulated carrier	Criterion A
Conducted emissions	EN 50155:2017 EN 50121-3-2:2016/ A1:2019 IEC60571:2012 IEC 62236-3-2:2018	150 kHz – 500 kHz: 99 dBµV quasi-peak 500 kHz – 30 MHz: 93 dBµV quasi-peak	Compliant with more strict EN 55032 Class A
Radiated emissions	EN 50155:2017 EN 50121-3-2:2016/ A1:2019 IEC60571:2012 IEC 62236-3-2:2018	30 MHz – 230 MHz: 40 dBµV/m quasi-peak at 10 m 230 MHz – 1000 MHz: 47 dBµV/m quasi-peak at 10 m	Class A required, but compliant with more strict Class B

Vitec POWER GmbH
Bahnstraße 65-67/2/2, 2230 Gänserndorf, AUSTRIA
Tel.: +43 (0) 2282 3144, E-Mail: office@vitecpower.com

ENVIRONMENATAL CHARACTERISTICS

Operating Temperature	-50 °C – +85 °C Class OT4: -40 – +70 °C and class ST1,ST2: +15 °C according to EN50155:2017 extended down to -50 °C
Cooling	Natural convection. Additionally for the open frame variants IC27X_2 and IC27X_6, two gap-pads can be used to improve heat dissipation to the outside environment (refer to section 'Mechanical Characteristics and Mounting').
Storage Temperature Range	-50 °C – +100 °C
Altitude Class	5000 m above sea level max.
Pollution Degree	PD2 according to EN50124-1:2017
Shock and Vibration	According to EN 61373:2010, category 1, class B
Rapid Temperature Variation	Class H2 according to EN 50155:2017: -25 °C to +15 °C/95 %RH, ±3 °C/s +10 °C to 40 °C/60 %RH, ±3 °C/s
Protective Coating	Class PC2 according to EN 50155:2017 The board is protected on both sides with a protective transparent fluorescent-pigment coating to prevent deterioration or damage due to moisture and atmospheric contaminants. The coating is compliant with class 2, according to IPC-A-610G: 2017.
Prohibited Substances	No substances defined as Prohibited according to the RoHS, REACH, UNIFE (RISL), or Prohibited for the Project, are present. No substances defined as Declarable according to RoHS, REACH, UNIFE (RISL), or Declarable for the Project, are present.
Fire behaviour	EN 45545-2:2013+A1:2015 compliant with all Hazard Levels HL1-HL3

Vitec POWER GmbH
Bahnstraße 65-67/2/2, 2230 Gänserndorf, AUSTRIA
Tel.: +43 (0) 2282 3144, E-Mail: office@vitecpower.com

GENERAL CHARACTERISTICS

General Standard	EN50155:2017 Railway applications - Rolling stock - Electronic equipment IEC 60571:2012 Railway applications - Electronic equipment used on rolling stock			
Useful Life Class	Class L4 (20 years) according to EN50155:2017			
MTBF Calculation method: MIL-HDBK-217-F2 Using demonstrated Failure Rates of components	**Ground Benign (GB), +25 °C**	**Ground Benign (GB), +40 °C**	**Ground Fixed (GF), +40°C**	**Ground Mobile (GM), +40 °C**
	14 085 000 h	9 758 000 h	2 214 000 h	1 045 000 h
MTBF Calculation method: SN 29500 (IEC 61709)	2 347 000 h @ +50 °C			
Marking	Label with following information: - part number, output voltage, output power - input voltage (IC27X_1 only) - serial number for identification and traceability (printed in text format and as barcode) - revision index			
Connector identification	IC27X_2, IC27X_6: printings on PCB to identify connectors and pin 1. IC27X_3: printings on chassis to identify connectors and pin-functions.			

Vitec POWER GmbH
Bahnstraße 65-67/2/2, 2230 Gänserndorf, AUSTRIA
Tel.: +43 (0) 2282 3144, E-Mail: office@vitecpower.com

SAFETY AND INSULATION

Safety Standards	EN 60950-1:2006+A2:2013, IEC 60950-1:2005+A1:2009+A2:2013 CSV, EN 62368-1:2014+A11:2017 IEC 62368-1:2018
Insulation Coordination	According to EN50124-1:2017
Input, Output, Chassis	The input is galvanically isolated to the output. Input and output are galvanically isolated to the base-plate (or chassis). IC27X_2, IC27X_6: for the open frame variants, the isolation characteristics are ensured only if mounted according to section 'Mechanical Characteristics and Mounting'.
Input to Output	Isolation Voltage: 3300 Vrms at 2000 m altitude, 60 s 2500 Vrms at 5000 m altitude, 60 s Clearance: 5.5 mm Creepage: 5.5 mm For the type test, the Y-capacitors must be removed according to EN 61287-1:2014. Please ask intreXis AG for advice. For the routine test according to EN50124-1:2017 of Input to Output and Input to Chassis, intreXis AG recommends the following procedure: connect Output to Chassis, apply a test-voltage of 2125 VDC or 1500 VAC with trigger threshold ≥10 mA), 10 s between Input and Chassis. For this test, the Y-capacitors must not be removed. Please ask intreXis AG for advice.
Input to Base-plate (or Chassis)	Isolation Voltage: 1500 Vrms, 60 s Clearance: 2.5 mm Creepage: 2.5 mm For the routine test, see above.
Output to Base-plate (or Chassis)	Isolation Voltage: 1000 Vrms, 60 s Clearance: 1.6 mm Creepage: 1.6 mm
Insulation Resistance	Input-Chassis: >550 MΩ Input-Output: >550 MΩ Output-Chassis: >550 MΩ Test-voltage: 500 VDC

Vitec POWER GmbH
Bahnstraße 65-67/2/2, 2230 Gänserndorf, AUSTRIA
Tel.: +43 (0) 2282 3144, E-Mail: office@vitecpower.com

BLOCK DIAGRAM

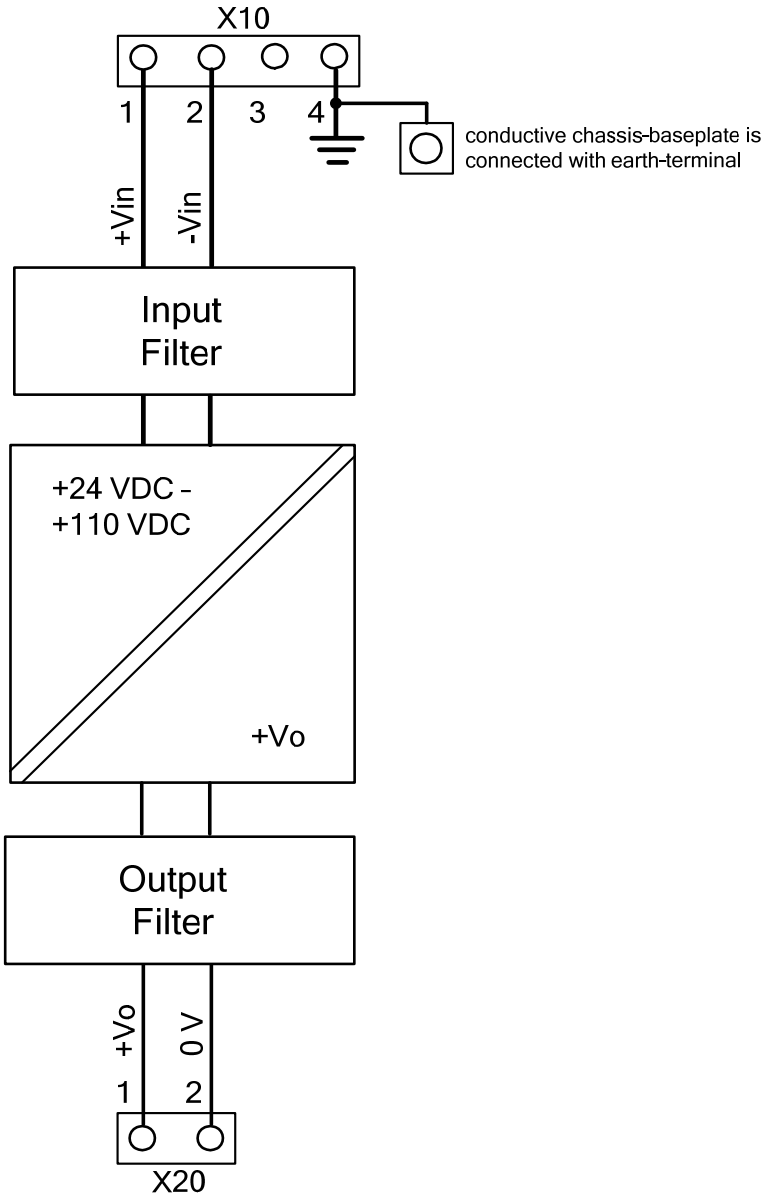

Note:
Conductive chassis-baseplate only for IC27X_3

Vitec POWER GmbH
Bahnstraße 65-67/2/2, 2230 Gänserndorf, AUSTRIA
Tel.: +43 (0) 2282 3144, E-Mail: office@vitecpower.com

CONNECTOR TYPES

IC271_2, IC272_2, IC273_2
(open frame, with push-in connectors)

X10	Phoenix SPTAF 1/ 4-3,5-EL or equivalent Pitch: 3.5 mm Number of pins: 4, horizontal Push-in spring connection, for wire-size of 1.5 mm^2 max. Strip length: 8 mm 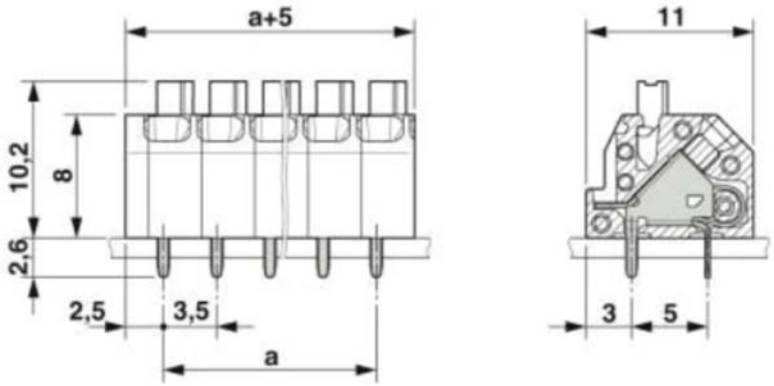
X20	Phoenix SPTAF 1/ 2-3,5-EL or equivalent Pitch: 3.5 mm Number of pins: 2, horizontal Push-in spring connection, for wire-size of 1.5 mm^2 max. Strip length: 8 mm 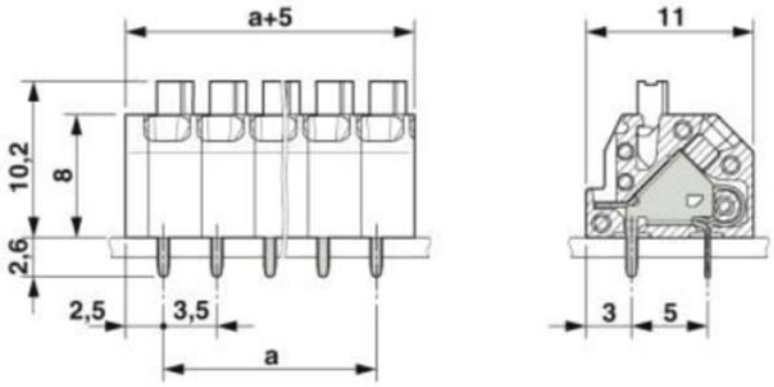

Vitec POWER GmbH
Bahnstraße 65-67/2/2, 2230 Gänserndorf, AUSTRIA
Tel.: +43 (0) 2282 3144, E-Mail: office@vitecpower.com

IC271_3, IC272_3, IC273_3
(standard chassis mount, with terminal block headers)

IC271_6, IC272_6, IC273_6
(open frame, with terminal block headers)

X10	Phoenix MC 1,5/4-G-3,5-RN or equivalent Pitch: 3.5 mm Number of pins: 4, horizontal 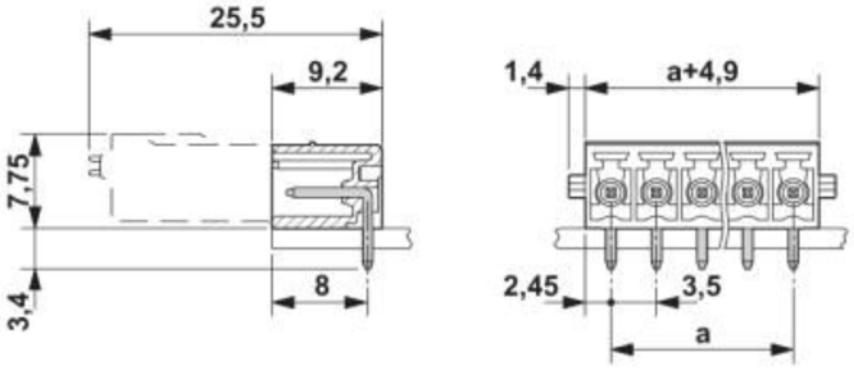 Mating part: Phoenix FMC 1,5/4-ST-3,5-RF Ordering code: 1952047 (with locking levers).
X20	Phoenix MC 1,5/2-G-3,5-RN or equivalent Pitch: 3.5 mm Number of pins: 2, horizontal 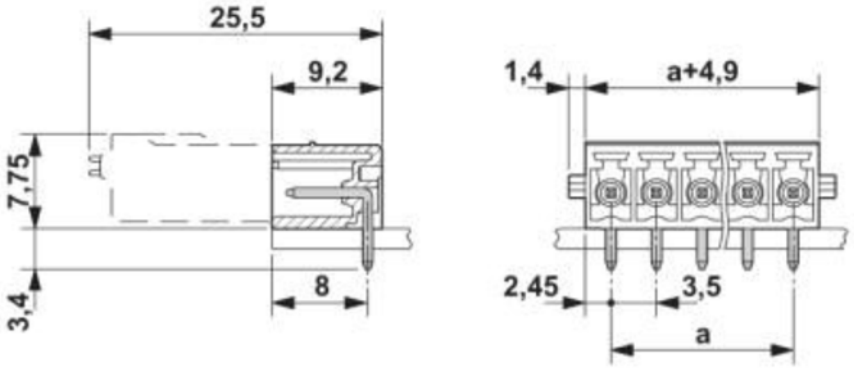 Mating part: Phoenix FMC 1,5/2-ST-3,5-RF Ordering code: 1952021 (with locking levers).

Vitec POWER GmbH
Bahnstraße 65-67/2/2, 2230 Gänserndorf, AUSTRIA
Tel.: +43 (0) 2282 3144, E-Mail: office@vitecpower.com

MECHANICAL CHARACTERISTICS AND MOUNTING

Chassis	Only IC27X_3: Aluminium: EN AW 5052 - AL5052 - AlMg2.5 or EN AW 5754 - AL5754 - AlMg3 Baseplate: blank Cover: black anodized
Overall dimensions	According to the drawings (millimeters, unless otherwise specified)
Weight	IC27X_2, IC27X_6: 98 g IC27X_3: 181 g
IP code	IC27X_2, IC27X_6: IP00 IC27X_3: IP20
Mounting	Mounting in any position is allowed

Mechanical drawings:

IC271_3, IC272_3, IC273_3 (standard chassis mount)

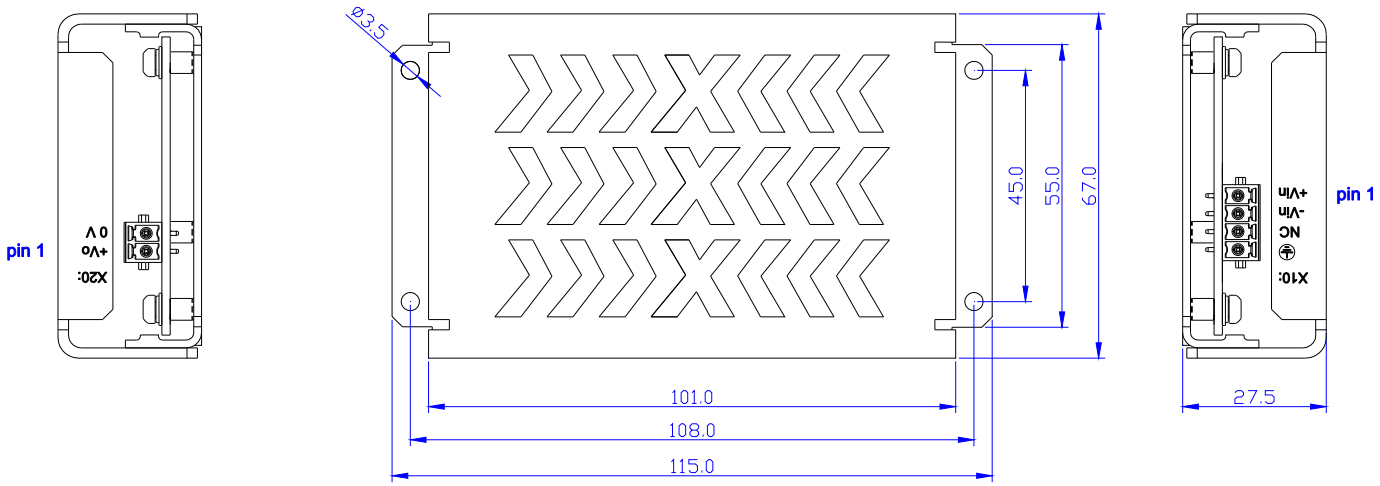

Output connector X20:
1. +Vo
2. 0 V

Input connector X10:
1. +Vin
2. -Vin
3. NC
4. Earth

The unit must be secured using four M3 screws or bolts (not supplied) in the mounting holes.

Vitec POWER GmbH
Bahnstraße 65-67/2/2, 2230 Gänserndorf, AUSTRIA
Tel.: +43 (0) 2282 3144, E-Mail: office@vitecpower.com

IC271_2, IC272_2, IC273_2 (open frame, with push-in connectors)

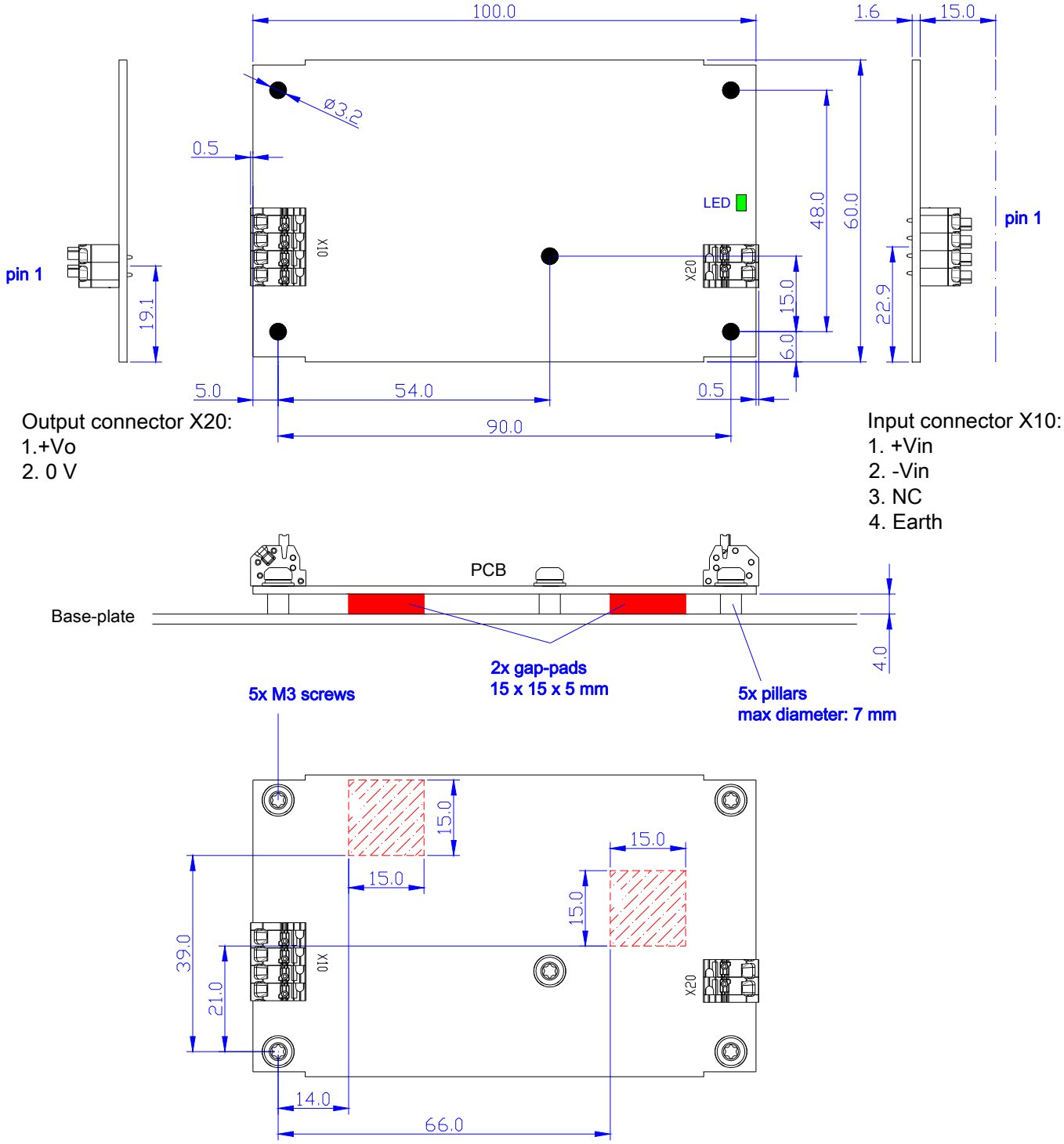

On the board, five mounting holes are provided to fix the units over pillars, using five M3 screws (pillars and screws not supplied). The pillars must be selected to ensure 4 mm gap between the base-plate and the PCB, as shown in the drawing. Longer pillars can be used, if no gap-pads are used (see below).

Vitec POWER GmbH
Bahnstraße 65-67/2/2, 2230 Gänserndorf, AUSTRIA
Tel.: +43 (0) 2282 3144, E-Mail: office@vitecpower.com

IC271_6, IC272_6, IC273_6 (open frame, with terminal block headers)

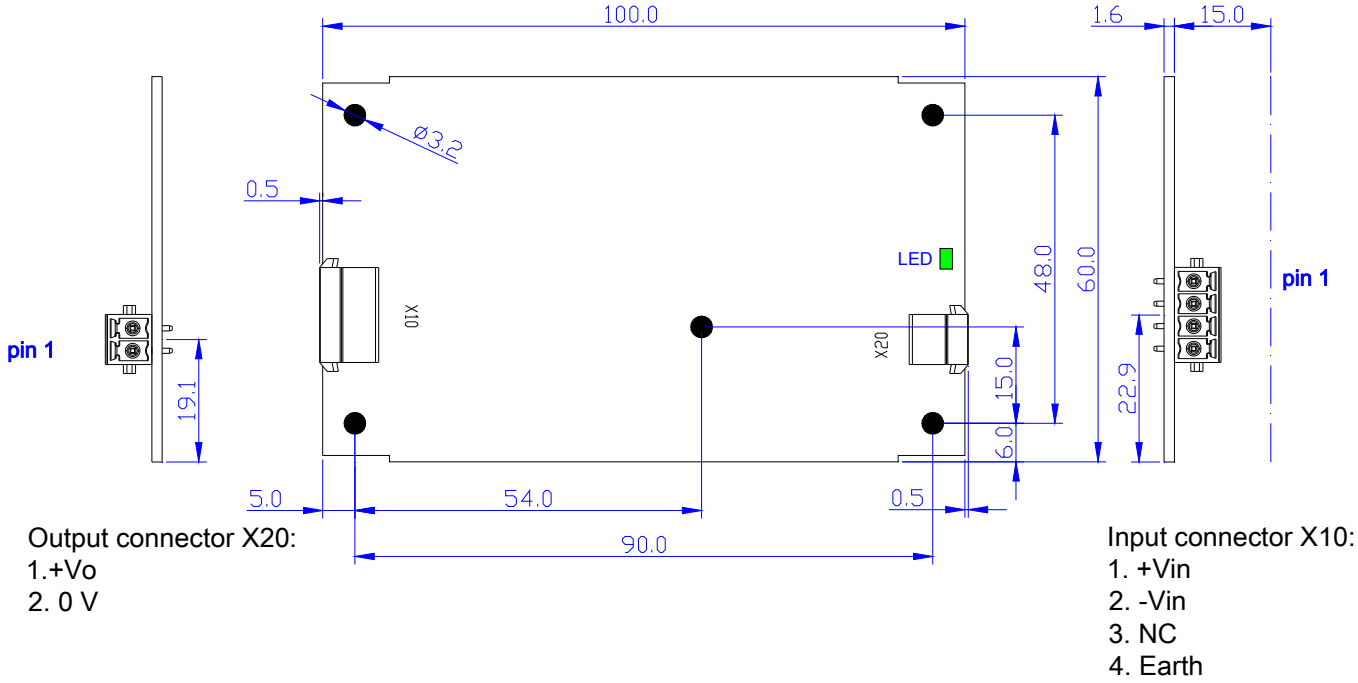

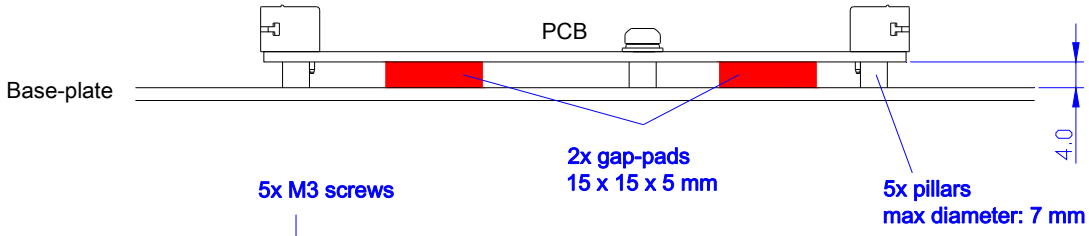

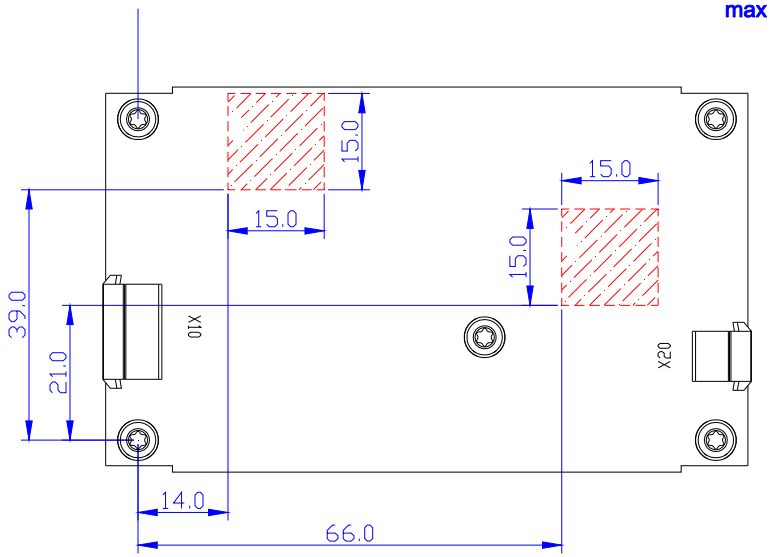

On the board, five mounting holes are provided to fix the units over pillars, using five M3 screws (pillars and screws not supplied). The pillars must be selected to ensure 4 mm gap between the base-plate and the PCB, as shown in the drawing. Longer pillars can be used, if no gap-pads are used (see below).

Vitec POWER GmbH
Bahnstraße 65-67/2/2, 2230 Gänserndorf, AUSTRIA
Tel.: +43 (0) 2282 3144, E-Mail: office@vitecpower.com

Gap-pads for cooling (only open frame versions):

For most applications, the gap-pads are not necessary and conductive cooling is sufficient for full power (no derating) over the entire ambient temperature range.
The gap-pads are only necessary for applications where it is desired to conduct as much heat as possible to the outside, to keep the internal chassis-temperature as low as possible (for instance closed chassis with other heat sources). In this case, two thermally-conductive gap-pads can be positioned under the PCB as specified in the drawing to allow heat transfer to the base-plate.
The gap-pads must be ordered separately from intreXis AG, ordering code: ***gappad_15x15x5.***
The base-plate must be thermally conductive (e.g. steel or aluminum).

Gap-pad properties:

Dimensions	15 x 15 mm
Thickness	5.0 mm
Color	Yellow fiberglass Pink rubber 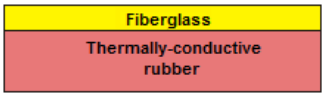
Specific Gravity	2.3
Hardness (Shore 00)	45
Tensile Strength	58 Kgf/cm^2
Elongation	12 %
Operating temperature	-55 – 200 °C
Thermal Conductivity	3.6 W/mK
Breakdown voltage	> 12 kV/mm
Volume resistance	> 10^{12}Ω-cm
Dielectric Constant	4.3 @ 60 Hz 4.2 @ 1 kHz 4.0 @ 1 MHz

Vitec POWER GmbH
Bahnstraße 65-67/2/2, 2230 Gänserndorf, AUSTRIA
Tel.: +43 (0) 2282 3144, E-Mail: office@vitecpower.com

TEST COMPLIANCE SUMMARY (CERTIFICATE OF CONFORMITY)

Performed Test	Standard	Test conditions	Performance level	Reference document
Visual inspection	EN 50155:2017 IEC60571:2012	Aspect, dimensions, weight, markings	According to design specification	Test report
Performance test	EN 50155:2017 IEC60571:2012	Ambient temperature. Nominal supply voltage: 24 VDC and 110 VDC Supply voltage range: 16.8 – 137.5 VDC (static)	Criterion A	Test report
Power supply test Supply overvoltages	EN 50155:2017 IEC60571:2012	Supply voltage: 14.4–154 VDC 1s	Criterion B required, but tested with more strict criterion A	Test report
Insulation test	EN 50155:2017 IEC60571:2012	Input–Chassis 500 VDC Input– Output 500 VDC Output – Chassis 500 VDC Repeated after Voltage withstand test Voltage withstand test: Input–Chassis 1500 Vrms 60 s Input– Output 3300 Vrms 60 s Output– Chassis 1000 Vrms 60 s	Resistance > 20 MΩ (measured >550 MΩ, exceeding the requirement) No disruptive discharge	Test report
Low temperature start-up test Cold start test	EN 50155:2017 IEC60571:2012	T = -50 °C	Criterion A (exceeds the requirements, extended range down to -50 °C for extremely cold environments)	Test report
Dry heat test	EN 50155:2017 IEC60571:2012	T = +85 °C (cycles B and C)	Criterion A	Test report
Cyclic damp heat test	EN 50155:2017 IEC60571:2012	T = +55 °C and +25 °C (2 cycles)	Criterion A	Test report
EMC test	EN 50155:2017 EN 50121-3-2:2016/ A1:2019 IEC60571:2012 IEC 62236-3-2:2018	See section 'Electromagnetic Compatibility (EMC)'		R-EM-354-0418-02A
Vibration and shock test	EN 50155:2017 IEC60571:2012	EN 61373:2010, Category 1, class B		compliant

Vitec POWER GmbH
Bahnstraße 65-67/2/2, 2230 Gänserndorf, AUSTRIA
Tel.: +43 (0) 2282 3144, E-Mail: office@vitecpower.com

Additional tests:

Performed Test	Standard	Test conditions	Performance level	Reference document
Fire behaviour	EN 45545-2:2013+ A1:2015	PCB: R25 (EN 60695-2-11, T16: No ignition at T=850 °C)	PASSED (HL1-HL2-HL3)	Fire_Certificate_IC27X

Furthermore, the product is compliant with the requirements of:

- EC 1907/2006 (December,18th 2006) REACH regulation: Registration, Evaluation, Authorisation and Restriction of Chemicals.

- UNIFE Railway Industry Substance List

Neuhausen am Rheinfall, 29.06.2018

Thomas Schiegg
intreXis AG

Vitec POWER GmbH
Bahnstraße 65-67/2/2, 2230 Gänserndorf, AUSTRIA
Tel.: +43 (0) 2282 3144, E-Mail: office@vitecpower.com

EU DECLARATION OF CONFORMITY (DoC)

Product Models	IC271_2, IC272_2, IC273_2; IC271_3, IC272_3, IC273_3, IC271_6, IC272_6, IC273_6	
Name and address of the manufacturer	intreXis AG Tobelraastrasse 4 CH-8212 Neuhausen am Rheinfall Switzerland	
This declaration of conformity is issued under the sole responsibility of the manufacturer.		
IC271_2, IC272_2, IC273_2 	IC271_3, IC272_3, IC273_3 	IC271_6, IC272_6, IC273_6 
The object of the declaration described above is in conformity with the relevant Union harmonisation legislation:	Low Voltage Directive: RoHS Directive: EMC Directive:	2014/35/EU 2011/65/EU 2014/30/EU
References to the relevant harmonised standards used or references to the other technical specifications in relation to which conformity is declared:	Low Voltage Directive: RoHS Directive: EMC Directive: Railway Applications:	EN 60950-1:2006+A2:2013 EN 62368-1:2014+A11:2017 EN 63000:2018 EN 50121-3-2:2016/ A1:2019 EN 50155:2017
Signed for and on behalf of:	intreXis AG Tobelraastrasse 4 CH-8212 Neuhausen am Rheinfall Switzerland	
Place, Date of issue	Neuhausen am Rheinfall, 29.03.2020	
Name, Function, Signature	Thomas Schiegg, Managing Director:	

Vitec POWER GmbH
Bahnstraße 65-67/2/2, 2230 Gänserndorf, AUSTRIA
Tel.: +43 (0) 2282 3144, E-Mail: office@vitecpower.com

INSTALLATION AND OPERATION

Safety	Warning / Caution ! The power supplies should be installed and put into operation only by qualified personnel. Before installing or removing the unit, disconnect the power from the system. IC27X_3, IC27X_6: for 72 V and 110 V input applications, in addition to the main protective earthing terminal (X10/pin 4), a separate protective earthing terminal must be permanently connected to the conductive chassis-baseplate (IC27X_3) or to the plated mounting holes, e.g. through pillars (IC27X_6).
Servicing	In case of failures, malfunctions or defects, the converter must be returned to intreXis for analysis and repair. In particular, the converter should be sent to intreXis for analysis if any damage has occurred to the unit (e.g. the unit dropped). Any attempts to open and repair the unit could void the warranty and could expose the operator to hazardous voltages.
Spare Parts	List and drawings of spare parts are not provided, since the failed units have to be returned to intreXis for analysis and repair.
Disposal	Disused units must be collected separately and disposed at a suitable recycling facility.
Connecting the Cables	Ensure that proper wires are used according to the input current specifications. Prepare the cables according to the specifications of the particular connector used.
Operation of the Unit	Once the input power is applied, the output voltage is enabled.

Vitec POWER GmbH
Bahnstraße 65-67/2/2, 2230 Gänserndorf, AUSTRIA
Tel.: +43 (0) 2282 3144, E-Mail: office@vitecpower.com